

RAYON LIGHTING

JOB INFORMATION

Type: _____

Catalog No: _____

Project Name: _____

Comments: _____

_____

Prepared by: _____

T332LEDB-F

T332LEDB-F

LED POST-TOP FROSTED LENS

USE OF PRODUCT

Architectural post-top luminaire designed for outdoor lighting applications, providing efficient nighttime illumination while serving as a refined daytime landscape element. Ideal for pathways, plazas, campuses, parks, and street spaces where controlled distribution and visual comfort are required.

CONSTRUCTION

Die-cast aluminum housing protects thermally conductive LED boards and internal electrical components. Fully sealed construction resists environmental contaminants and is rated for wet locations. Ultra-slim, streamlined housing minimizes visual bulk while discouraging debris and nesting interference. Advanced thermal and electrical separation enhances heat dissipation and long-term performance.

FINISH

Bronze matte-finished, architectural powder coat over a precise chromate conversion coating. Consult factory for made-to-order finish.

ELECTRICAL

120–347VAC universal input voltage. Field-selectable wattage and lumen packages available across multiple output ranges to accommodate project-specific performance requirements. Built-in surge protection standard at 6kV.

LED

Color temperature selectable (3000K / 4000K / 5000K) with CRI ≥80. Estimated L70 ≥100,000-hour LED lifespan based on IES LM-80 data and TM-21 projections.

OPTICS

Equipped with a frosted lens to deliver uniform light distribution and reduced glare.

DRIVER

Durable LED driver operates at 120-277V with 0-10V dimming protocol. Power factor: 0.90; 50 to 60 Hz. Driver protections includes: Output open load, over-current and short-circuit, and over-temperature with auto recovery.

MOUNTING

Pole-top mounting compatible with 2-3/8" to 3 diameter poles. Designed for secure installation and long-term outdoor durability.

LISTINGS/COMPLIANCE/ WARRANTY

- DLC qualified
- UL/cUL -Suitable for wet locations.

UL LISTED | DLC | 5 YEAR LIMITED WARRANTY | SELECTABLE

ORDERING INFO

SERIES	LENS	WATT/LUMENS	VOLTAGE	COLOR TEMPERATURE
T332LEDB	**F -** Frosted	**WS130** - Wattage Selectable (130W, 104W, 78W, 52W) **S130W** - Set at 130W **S104W** - Set at 104W **S78W** - Set at 78W **S52W** - Set at 52W	**UNV** - 120V–347V	**CTS** - Color Temperature Selectable (3000K, 4000K, 5000K) **S30K** - Color Temp. set at 3000K **S40K** - Color Temp. set at 4000K **S50K** - Color Temp. set at 5000K

MOUNTING	INCLUDED	FINISH	OPTIONS
PM - Pole Mount	**PC** - Photocell	**BZ** - Bronze **MTO** - Made To Order **MGTO** - Marine Grade Made To Order	**MSI** - Standard PIR Motion Sensor Integral

RAYON LIGHTING GROUP, INC. RESERVES THE RIGHT TO CHANGE SPECIFICATIONS WITHOUT NOTICE.

1512 N. TAMARIND AVE., COMPTON, CA 90222 | TEL 323.446.2626 | FAX 323.446.2606 | RAYONLIGHTING.COM

T332LEDB-F

LED POST-TOP FROSTED LENS

T332LEDB-F-WS130 PERFORMANCE CHART							
SYSTEM WATTS	CRI	3000K		4000K		5000K	
		LUMENS	LPW	LUMENS	LPW	LUMENS	LPW
130W	80+	18,000 lm	138 lm/W	19,500 lm	150 lm/W	18,500 lm	142 lm/W
104W	80+	15,200 lm	146 lm/W	16,000 lm	154 lm/W	15,500 lm	149 lm/W
78W	80+	12,000lm	154 lm/W	13,000 lm	167 lm/W	12,500 lm	160 lm/W
52W	80+	8,500 lm	163 lm/W	9,000 lm	173 lm/W	8,750 lm	168 lm/W

*Lumen values are rounded for clarity. Exact photometric data is available in the IES files.

B.U.G. RATING

WATTS	B U G
130W	3 1 3

DIMENSIONS

EPA: 0.34 Sq. Ft.

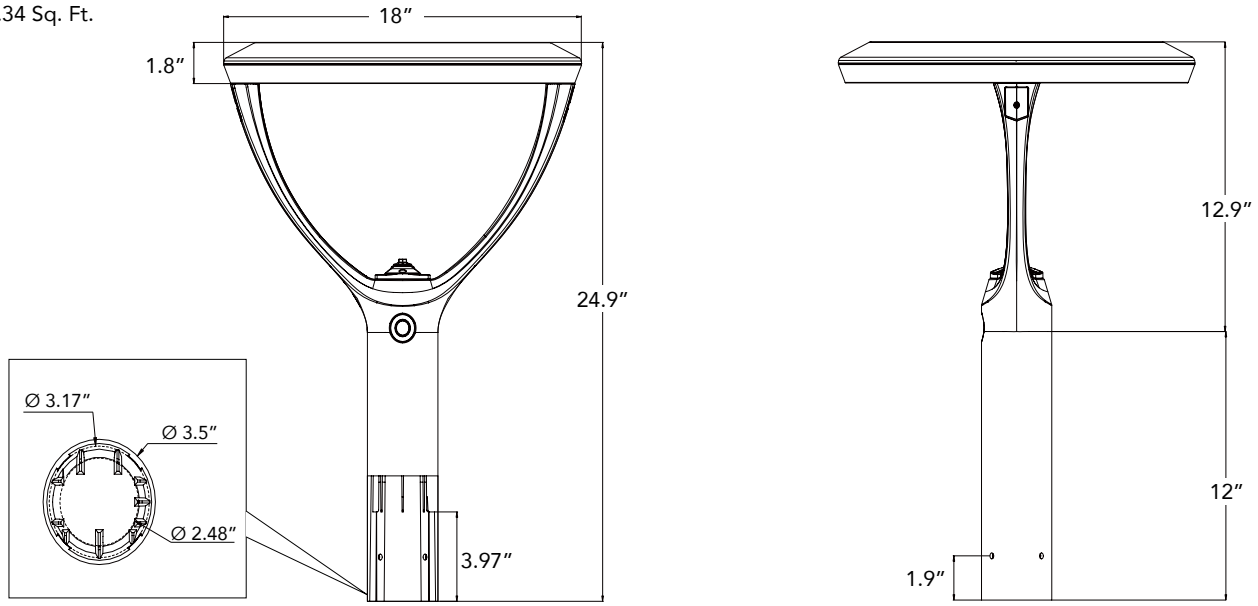

RAYON LIGHTING GROUP, INC. RESERVES THE RIGHT TO CHANGE SPECIFICATIONS WITHOUT NOTICE.

1512 N. TAMARIND AVE., COMPTON, CA 90222 | TEL 323.446.2626 | FAX 323.446.2606 | RAYONLIGHTING.COM